**FOLD ONE WAY ONLY**

## REVISIONS

| Rev. | Description | By | Date | ECN No. |
|---|---|---|---|---|
| A | NEW DRAWING | PA | - | - |

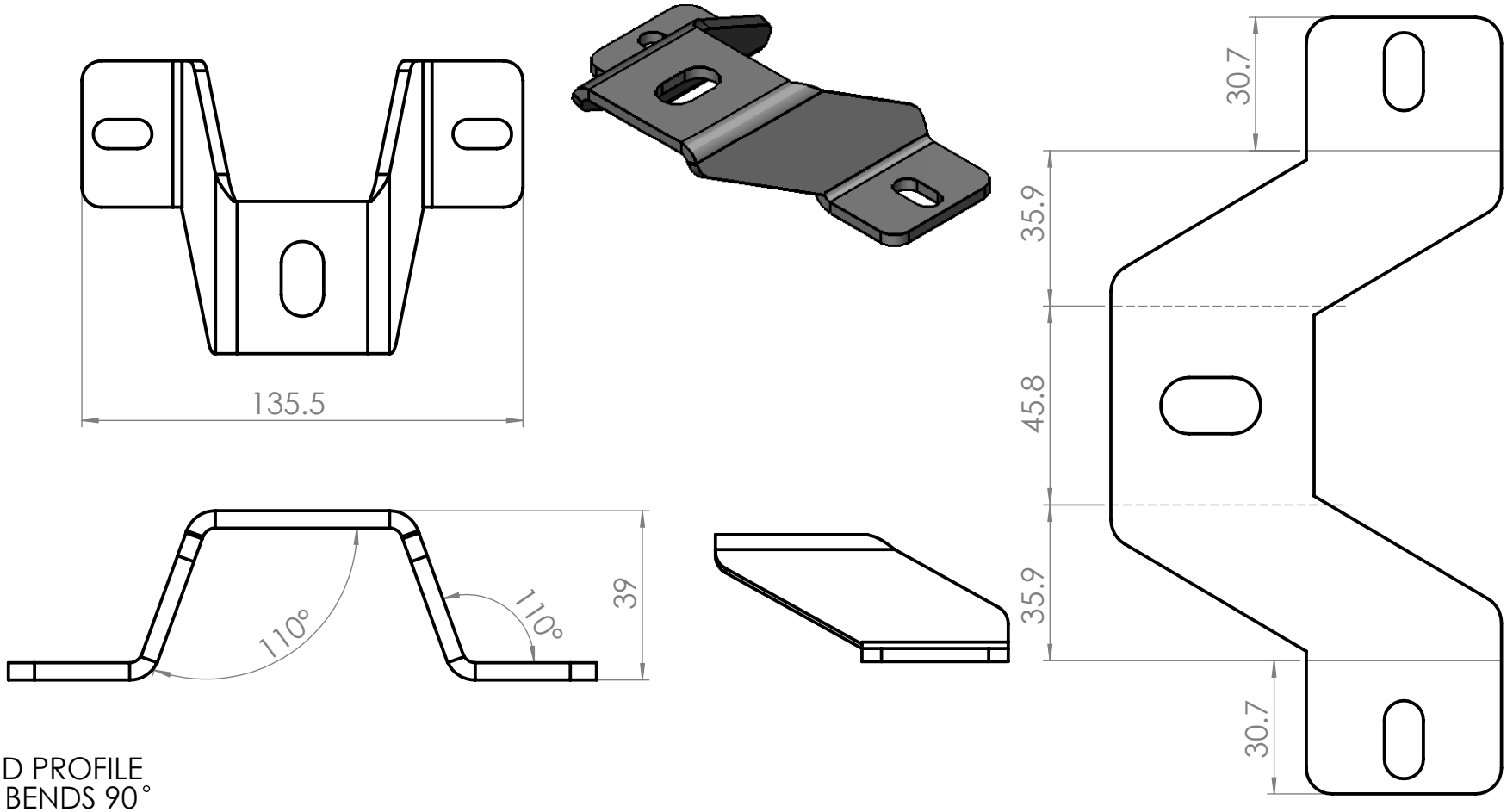


BEND PROFILE
ALL BENDS 90°
UNLESS SPECIFIED
ALL DIMENSIONS ARE FINISHED SIZES

LASER PROFILE

**COPYRIGHT**
ALL RIGHTS RESERVED. THIS DRAWING MUST NOT BE COPIED OR USED FOR ANY PURPOSE WITHOUT THE EXPRESS AUTHORITY OF THIS COMPANY.

| Angular | | Linear | |
|---|---|---|---|
| 0 - 25mm | ± 2° | 0 - 50mm | ± 0.5 |
| 25 - 75mm | ± 1° | 50 - 1000mm | ± 1.0 |
| 75 - 200mm | ± 0.5° | 1000 - 2000mm | ± 1.5 |
| 200 + mm | ± 0.25° | 2000 + mm | ± 2.0 |

Material: **4MM**

Finish: GOLD PASSIVATE POWDERCOAT BLACK

REFER TO MATERIAL GAUGE FOR BEND RADIUS, UNLESS OTHERWISE STATED

| GAUGE: | 2 - 3 mm | 4 - 5 mm |
|---|---|---|
| INTERNAL BEND RAD. | 0.8 RAD (TOP TOOL) | 3.0 RAD (TOP TOOL) |

FOLDING PARAMETERS, KEY:-
- - - - - - FOLD DOWN ——— FOLD UP

REMOVE ALL BURRS AND SHARP EDGES

DO NOT SCALE

ALL DIMENSIONS IN MILLIMETRES

Third Angle Projection

Scale: 1:2

Sheet Size: A4

# ARB Corporation Limited Australia

Drawn: **P.A**

Date: **7 .2 07**

Checked

Approved

Part Description: JK JEEP LIGHT BOLT ON

Part Nos: **3757047**

Page: 1 OF 3

Rev: A

# PRESS BRAKE SET-UP SHEET (Reference only)

Refer to drawing for finished part decriptions

| Part No. 3757047 | Revision : -- | Description: --- |
|---|---|---|

| AMADA 80T | --- | AMADA 100T | --- | APX 103 | --- | RG50 | --- |
|---|---|---|---|---|---|---|---|

| Bend No. | Bend detail | Top/Bot die | Bend No. | Bend detail | Top/Bot die | Bend No. | Bend detail | Top/Bot die | Bend No. | Bend detail | Top/Bot die |
|---|---|---|---|---|---|---|---|---|---|---|---|
| A | --- | -/- | | | | | | | | | |
| B | --- | -/- | | | | | | | | | |
| C | --- | -/- | | | | | | | | | |
| D | --- | -/- | | | | | | | | | |
| E | --- | -/- | | | | | | | | | |
| F | --- | -/- | | | | | | | | | |
| G | --- | -/- | | | | | | | | | |
| H | --- | -/- | | | | | | | | | |
| I | --- | -/- | | | | | | | | | |
| J | --- | -/- | | | | | | | | | |
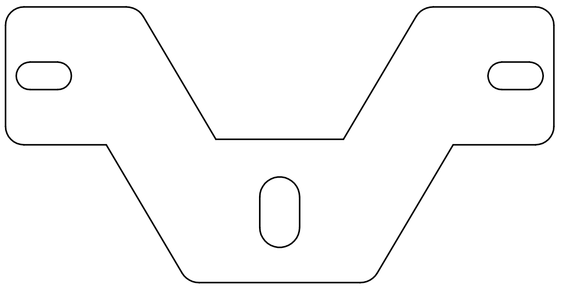
Additional Information :